THERMAL PRINTER

TSP200 SERIES

USERS MANUAL
Z-TYPE

star

Federal Communications Commission
Radio Frequency Interference
Statement

This equipment has been tested and found to comply with the limits for a Class A digital device, pursuant to Part 15 of the FCC Rules. These limits are designed to provide reasonable protection against harmful interference when the equipment is operated in a commercial environment. This equipment generates, uses and can radiate radio frequency energy and, if not installed and used in accordance with the instruction manual, may cause harmful interference to radio communications. Operation of this equipment in a residential area is likely to cause harmful interference in which case the user will be required to correct the interference at his own expense.

For compliance with the Federal Noise Interference Standard, this equipment requires a shielded cable.

This statement will be applied only for the printers marketed in U.S.A.

Statement of
The Canadian Department of Communications
Radio Interference Regulations

This digital apparatus does not exceed the Class A limits for radio noise emissions from digital apparatus set out in the Radio Interference Regulations of the Canadian Department of Communications.

Le présent appareil numérique n'émet pas de bruits radioélectriques dépassant les limites applicables aux appareils numériques de la classe A prescrites dans le Règlement sur le brouillage radioélectrique édicté par le ministère des Communications du Canada.

The above statement applies only to printers marketed in Canada.

Self Declaration

Radio interference regarding this equipment has been eliminated according to Vfg 1046/1984 announced by the DBP.

DBP has been informed about the introduction of this special equipment and has been conceded the right to examine the whole series.

It is upon the responsibility of the user to assume that his own assembled system is in accordance with the technical regulations under Vfg 1046/1984.

To observe FTZ-regulations it is necessary, to establish all connections to the printer with shielded cable.

The equipment may only be opened by qualified service representatives.

The statement will be applied only for the printers marketed in Germany.

NOTICE

- *All rights reserved. Reproduction of any part of this manual in any form whatsoever, without STAR's express permission is forbidden.*
- *The contents of this manual are subject to change without notice.*
- *All efforts have been made to ensure the accuracy of the contents of this manual at the time of going to press. However, should any errors be detected, STAR would greatly appreciate being informed of them.*
- *The above notwithstanding, STAR can assume no responsibility for any errors in this manual.*

TABLE OF CONTENTS

1. OUTLINE

The TSP200 Series Thermal Printer is designed for use with ECR, electronic instruments, CAT or computer peripheral equipment's, kitchen printers and so on.

The major features of the TSP200 Series are as follows:

1. Quiet and fast direct thermal printing.
2. Compact designed printer.
3. Versatile print functions, including expanded character mode, inverted character printing and underlining, barcode mode, bit image graphics, can be set by print commands.
4. The data buffer allows the unit to receive print data even during printing.
5. Peripheral unit drive circuit enables control of external devices such as cash drawers.
6. The RS-232C serial interface and the Centronics parallel interface are standard.
7. TSP242 is the version with the automatic paper cutter.
8. TSP212 is the version without the paper cutter.
9. Build-in power supply 100VAC~240VAC (50/60Hz).

2. UNPACKING AND INSPECTION

2-1. Unpacking

Check each item in the box against Figure2-1 to make sure that you have everything (there should be two items).
If any of these items are missing, contact your supplier.

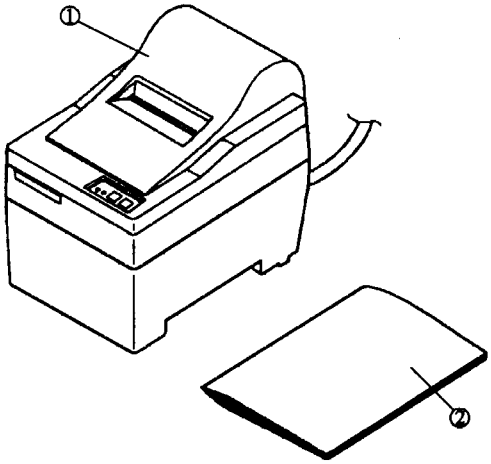

① Printer
② User's Manual

Figure2-1. Check to make sure you have all items: 1) Printer 2) User's Manual

2-2. Handling Notes

Before you start setting up your printer, make sure that you have a suitable place on which to locate it. By "a suitable place", we mean:

- A firm, level surface which is fairly vibration-free
- Away from excessive heat (such as direct sunlight, heaters, etc.)
- Away from excessive humidity
- Away from excessive dust
- A steady power supply that is not subject power surges should be connected to the printer. For example, do not connect it to the same circuit as a large, noise-producing appliance such as a refrigerator or an air conditioner.
- Make sure the line voltage is the voltage specified on the printer's identification plate.

The socket-outlet shall be installed near the equipment and shall be easily accessible.

3. PARTS IDENTIFICATION AND NOMENCLATURE

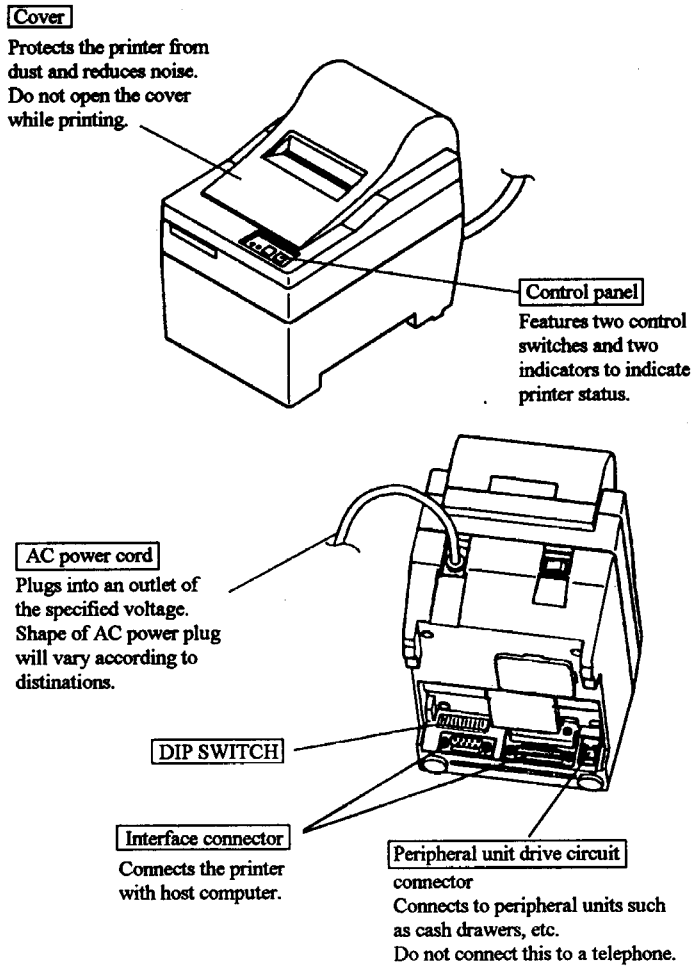

Figure 3-1. External view of the printer

4. SETTING UP

4-1. Loading the Paper

(1) Lift the cover up approx.3cm. Hold the cover tilted at this angle, then pull it toward you to remove it.
(2) Cut off the front edge of the roll paper perpendicularly.
(3) Confirm that the power of the printer is turned on.
(4) Raise the thermal head to the up position.
(5) While observing the direction of the roll paper, insert the top end of the paper beneath the paper guide as far as it will go. The top end of the paper comes out from the paper exit. For the TSP242 it comes out from the paper exit to the autocutter unit.
(6) Check the paper aligned correctly and lower the thermal head to the down position.
(7) Move the paper roll holder in the direction of the arrow, and insert the roll so that the holes in the core align with the axes of the paper roll holder. Release the paper roll holder to secure the paper.
(8) If the paper roll core has not been properly aligned with the paper roll holder, the cover cannot to properly seated until the paper position is corrected.

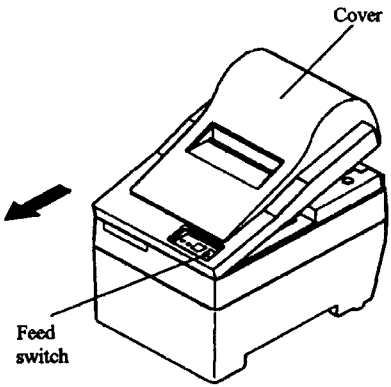

Figure 4-1 Removing the cover

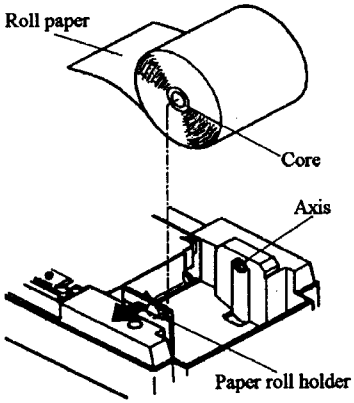

Figure 4-2 Loading the paper

(9) Press the <FEED> (paper feed) switch to feed the paper approximately 10cm.

(10) Insert the top edge of the paper into the tear bar slot, then mount the cover by reversing the procedure for removing the cover in step (1) above.

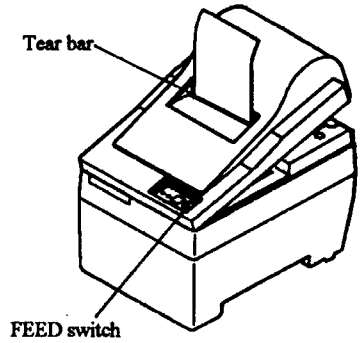

Figure 4-3 Insert the top edge of the paper into the tear bar slot.

NOTE :
When the paper end mark appears on the paper, replace the roll paper before it runs out.

4-2. Removing the Paper

Remove the cover, then cut off the paper near the rear of the paper guide and press the <FEED> switch to feed out the paper remaining in the unit.
When the paper runs out, the <POWER> lamp will blink.

NOTES :

1) Remove the paper remaining in the printer by pressing the <FEED> switch.
2) When the paper end mark appears on the paper, replace the roll paper before it runs out.
3) When removing the core of the roll paper, open the roll paper holder.

4-3. Connecting the Interface Cable

(1) Turn off power to both the host computer and the printer.

(2) Insert the connector at one end of the interface cable into the connector on the printer and the other connector into the connector for the host computer.

(3) Next, fasten the right and left screws for the respective interface connectors to fix them in place on the connectors.

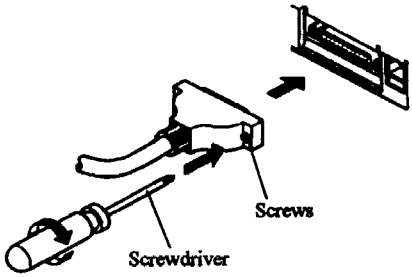

Fig. 4-4 Connecting the interface cable

NOTE:

It is necessary to make compatible the data transfer conditions between the computer and the printer with the DIP switch settings on the printer.
(Refer to "6. DIP SWITCH SETTINGS".)

5. SWITCHES AND INDICATORS

5-1. Buttons and Indicators Lights (LED)

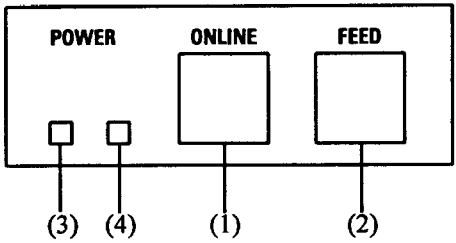

Fig. 5-1 Control Panel

(1) <ON LINE> button and indicator

The <ON LINE> button sets the printer on-line and off-line. The status changes each time you press the button.
When the printer is on-line, it can receive and print data from the host computer and will be indicated by the <ON LINE> indicator being lit.
When the printer is off-line, it stops printing and sends the computer a signal indicating that it cannot accept data.

(2) <FEED> button

When the printer is on-line or off-line, press the <FEED> button , the paper will feed forward.
If you hold the <FEED> button down, the printer perform consecutive feeds.
Paper can be fed by pressing the <FEED> button during printing.
The self-test is started by turning the power on while pressing the <FEED> button.
The defined macro is executed when the switch is pressed in the macro executing command stand-by state.
NOTE:
If the paper out, <FEED> button disable feed paper, need take the print head up, insert the paper and put the head down, then the <FEED>button enable.

(3) Power

Lights when the power for the printer is on.

(4) ON LINE and ERROR

ERROR LED display as follows:

Error	Blinking Pattern	Recovery
Print head paper out error	135ms ON OFF	Recovered by inserting paper and putting the head down
Print head-up error	135ms ON OFF	Recovered by putting the head down
Print head temperature over limit error (T>58°C or T<0°C)	270ms ON OFF	Recovers automatically when the print head temperature turn to 0°C~58°C

Fig. 5-2 Error LED display mode

6. DIP SWITCH SETTINGS

Following table shows the functions that you can set with the DIP switch settings.

Switch	Function	ON	OFF
SW-1 SW-2	Transfer speed	Refer below	
SW-3	Font	Font A(12dots x 24dots)	Font B(9dots x 17dots)
SW-4	Data protocol	DTR/DSR mode	XON/XOFF mode
SW-5	Data length	8-bit	7-bit
SW-6 SW-7	Parity condition	Refer below	
SW-8	<CR> Command	Ignore	Enable
SW-9 SW-10	Print Density	Refer below	
SW-11	Command set	I	II
SW-12	Data reception	Print " ? "	Ignore

* Transfer speed

Transfer speed	SW-1	SW-2	Transfer speed	SW-1	SW-2
1200BPS	OFF	OFF	4800BPS	OFF	ON
2400BPS	ON	OFF	9600BPS	ON	ON

* Parity condition

Parity condition	SW-6	SW-7
No parity	ON	ON
	ON	OFF
Odd parity	OFF	ON
Even parity	OFF	OFF

* Print density

Print Density	SW-9	SW-10	LEVEL
LIGHT	ON	ON	1
|	OFF	ON	2
|	ON	OFF	3
DARK	OFF	OFF	4

7. SERIAL INTERFACE

7-1. Specifications

Data transmission	:	Serial
Synchronization	:	Asynchronous
Handshaking	:	DTR/DSR or XON/XOFF control
Signal level	:	MARK = -3 to -10V : Logic "1"
		SPACE = +3 to +10V : Logic "0"
Baud rates	:	1200, 2400, 4800, 9600bps
Bit length	:	7 or 8 bits
Parity	:	Invalid, even, odd
Stop bits	:	1 bit or more
Connector	:	D-SUB 9 pin connector (Female)

7-2. Connector Signals

Pin No.	Signal Name	Signal Direction	Function
2	RXD	INPUT	Receive data
3	TXD	OUTPUT	Transmit data
4	DTR	OUTPUT	Printer Ready
5	GND	---------	Signal GND
7	RTS	OUTPUT	Request Transfer Send

7-3. Interface Connections

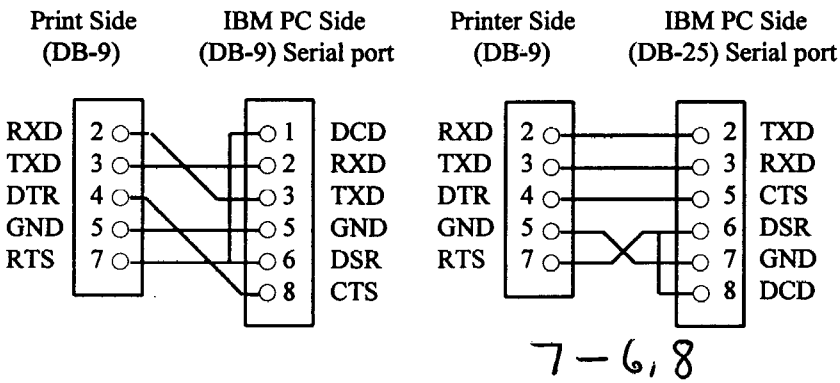

Fig. 7-1 Example of interface connections

7-4. Data Protocol

7-4-1. DTR/DSR mode

This mode is accessed when the DIP switch 4 is set ON.
Signals are controlled by using the DTR line as BUSY flag.

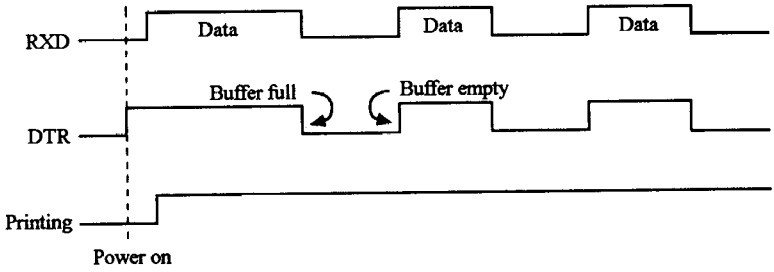

Fig 7-2 DTR/DSR mode timing

If printer errors do not occur after the power is turned on, the DTR signal line changes to Space.
When the host computer confirms that the DTR signal line is set to Space, the host computer sends the data text via RXD signal line to the printer. Also, the printer will set the DTR signal line to Mark when the empty space in the data buffer is below 80 bytes. After the host computer detects that the DTR signal line is at Mark, transmission of the data text is stopped. In this instance, data can still be received up until the data buffer becomes completely full.
When the empty space in the data buffer is increased following printing (when the data in the data buffer is reduced to 80 bytes or less), the printer sets the DTR signal line to Space.

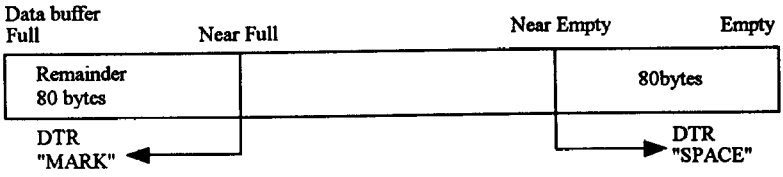

Fig. 7-3 DTR/DSR mode protocol

Paper out

When the paper-out detector sensed the end of the paper, the printer stops printing after printing maximum of two more lines or on feeding the paper. Immediately after a paper-out condition is detected, the printer sets to off-line and the DTR changes to Mark.

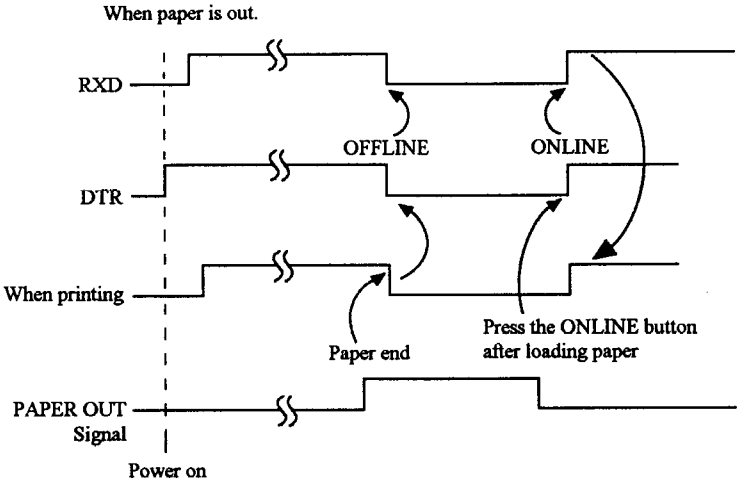

Fig. 7-4 Paper out timing

7-4-2. XON/XOFF mode

This mode is accessed when the DIP switch 4 is set OFF.
If printer errors do not occur after the power is turned on, the printer outputs an XON signal on the TXD signal line which send it to the host computer. When the host computer receives the XON signal, the host computer transmits the data to the RXD signal line for the printer. If data text is not sent from the host computer (even after transmitting the XON signal to the host computer), the printer outputs an XON signal at 0.5 second intervals until the printer receives data.
The printer starts outputting an XOFF signal when the empty space in the buffer reduces below 80 bytes. When the host computer receives the XOFF signal, it halts output of data. (However, the printer can continue receiving data until the buffer becomes completely full.)
Output of the XON signal is resumed when the data in the buffer is printed out and drops to below 80 bytes.

8. PARALLEL INTERFACE

8-1. Interface Specifications

The operating specifications of the parallel interface are as follows:

(1) Data transfer rate : 1000 to 15000 characters per second
(2) Synchronization : Via externally supplied /STROBE pulse
(3) Handshaking : /ACK and BUSY signals
(4) Logic level : Compatible with TTL level

8-2. Interface Timing

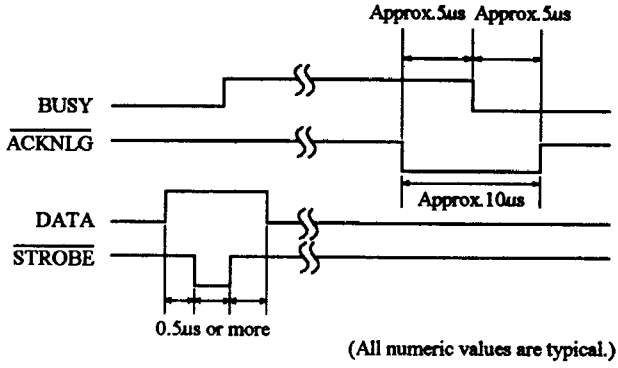

Fig.8-1 Interface timing diagram

	Signal Name	Circuit Example
INPUT	DATA1 - DATA8 (To printer)	4.7KΩ, 4.7KΩ, 74HC Compatible
INPUT	$\overline{\text{STROBE}}$ (To printer)	1Ω, 100Ω, 470pF, 74HC Compatible
OUTPUT	BUSY, $\overline{\text{ACK}}$ (From printer)	1.8KΩ, 74HC Compatible

Fig.8-2 Typical interface circuit

8-3. Connectors and Signals

Pin No.	Signal Name	IN/OUT	Function
1	/STROBE	IN	Signals when data is ready to be read. Signal goes from HIGH to LOW (for at least 0.5 microsec.) when data is available.
2~9	DATA1~8	IN	These signals provide the information of the first to eighth bits of parallel data. Each signal is at HIGH level for a logical 1 and at a LOW level for a logical 0.
10	/ACK	OUT	A 10 microsecond LOW pulse acknowledges receipt of data.
11	BUSY	OUT	When this signal goes LOW, the printer is ready to accept data. When the printer is on one of the conditions below. "HIGH" is set. 1. Data being entered. 2. Off line. 3. Error condition
12	PAPER OUT	OUT	This signal is normally LOW. It will go HIGH if the printer runs out of paper.
13	SELECTED	OUT	Pulled up to +5V through 4.7k ohms.
14~15	N.C.		Unused
16	SIGNAL GND		Signal ground
17	CHASSIS GND		Chassis gourd, isolated from logic ground.
18	N.C.		Unused
19~30	GND		Twisted pair return signal ground level.
31	/RESET	IN	When this signal goes LOW, the printer is reset to its power-on condition.
32	ERROR	OUT	This signal is normally HIGH. This signal goes LOW to signal that the printer due to an error condition.
33	EXT GND		External gourd
34	N.C.		Unused
35	N.C.		Unused
36	SEL-IN		Pulled up to +5V through 4.7k ohms.

NOTE:

For TSP200 with using the parallel interface please firstly turn on the power of the printer, and then turn on the power of the host computer.

9. PERIPHERAL UNIT DRIVE CIRCUIT

A drive circuit for driving peripheral units (such as cash drawers) is featured on the main logic board of this printer. A modular connector for driving peripheral unit is featured on the output side on the drive circuit. When using this circuit, connect the cable for the peripheral unit. (Cables must be prepared by the users.)

NOTE:
Peripheral unit drive circuit connector only connects to peripheral units such as cash drawers, etc. Do not connect it to a telephone.
Use cables which meet the following specifications.

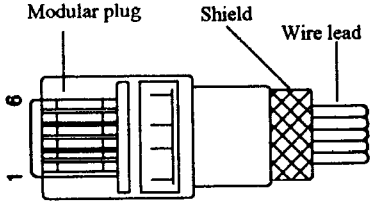

Manufacturer	Model
MOLEX AMP JAPAN BURNDY	90075-0007 641337

Fig.9-1 Cable specifications

NOTE:
Pin1 must be shield drain wire connected to peripheral device frame ground.

9-1. Connecting the Cable

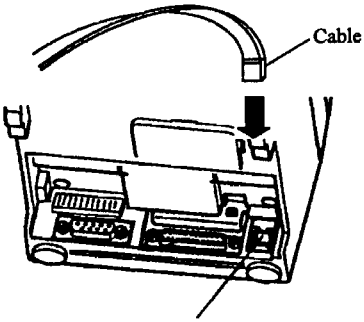

Fig.9-2 Connecting the cable

9.2 Drive Circuit (Drive output: 24V, max.1.0A)

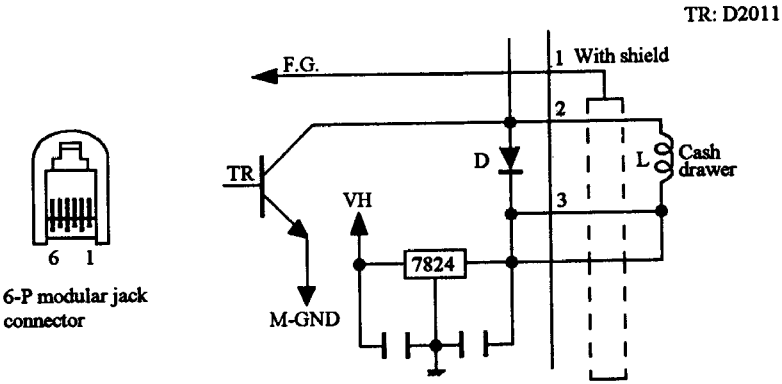

Fig.9-3 Drive circuit

10. CONTROL CODES

10-1. Command Summary

This section shows all of the commands for the command Set I and the command Set II.
The detail of each command is shown in following sections.

< Command Set I >

Control codes	Function	Page
<HT>	Horizontal tab	33
<LF>	Line feed	33
<CR>	Line feed	33
<ESC> <SP>	Set character spacing	22
<ESC> "!"	Set print mode	24
<ESC> "$"	Set absolute position	36
<ESC> "%"	Select/cancel user-defined character set	43
<ESC> "&"	Define user-defined characters	43
<ESC> "*"	Set bit image mode and print	39
<ESC> "2"	Set line spacing to 1/6 inch	35
<ESC> "3"	Set line spacing to n dots	35
<ESC> "@"	Reset printer	47
<ESC> "D"	Set horizontal tab position	36
<ESC> "J"	Print and feed paper n dot lines	34
<ESC> "R"	Select international character set	21
<ESC> "c5"	Enable/disable panel switches	47
<ESC> "c7"	Enable/disable reversing paper after cutting	47
<ESC> "d"	Print and feed paper n lines	34
<ESC> "i"	Full cut	49
<ESC> "m"	Partial cut	49
<ESC> "p"	Generate pulse	45
<ESC> "t"	Select character code table	21
<ESC> "{"	Set/cancel inverted character printing	26
<GS> "*"	Define down-loaded bit image	41
<GS> "/"	Print down-loaded bit image	42
<GS> ":"	Set starting/ending position of macro definition	48
<GS> "H"	Select printing position of HRI character	29
<GS> "^"	Execute macro	48
<GS> "f"	Select font for HRI characters	30

Control codes	Function	Page
<GS> "h"	Select height of bar code	29
<GS> "k"	Print bar code	28
<GS> "w"	Select horizontal size of bar code	28
<ESC> "\"	Set relative position	36
<ESC> "="	Select printer	46
<ESC> "V"	Set/cancel 90°cw rotate character printing	26
<ESC> "a"	Align position	37

< Command Set II >

Control codes	Function	Page
<HT>	Horizontal tab	33
<LF>	Line feed	33
<CR>	Line feed	33
<ESC> <SP>	Set character spacing	22
<ESC> "!"	Set print mode	24
<ESC> "$"	Set absolute position	36
<ESC> "%"	Select/cancel user-defined character set	43
<ESC> "&"	Define user-defined characters	43
<ESC> "*"	Set bit image mode and print	39
<ESC> "2"	Set line spacing to 1/6 inch	35
<ESC> "3"	Set line spacing to n dots	35
<ESC> "@"	Reset printer	47
<ESC> "D"	Set horizontal tab position	36
<ESC> "J"	Print and feed paper n dot lines	34
<ESC> "R"	Select international character set	21
<ESC> "c5"	Enable/disable panel switches	47
<ESC> "c7"	Enable/disable reversing paper after cutting	47
<ESC> "d"	cut paper	49
<ESC> "i"	Full cut	49
<ESC> "m"	Partial cut	49
<ESC> "p"	Generate pulse	45
<ESC> "t"	Select character code table	21
<ESC> "{"	Set/cancel inverted character printing	26
<GS> "*"	Define down-loaded bit image	41
<GS> "/"	Print down-loaded bit image	42
<GS> ":"	Set starting/ending position of macro definition	48
<GS> "H"	Select printing position of HRI character	29
<GS> "^"	Execute macro	48
<GS> "f"	Select font for HRI characters	30
<GS> "h"	Select height of bar code	29
<GS> "k"	Print bar code	28
<GS> "w"	Select horizontal size of bar code	28
<ESC> "\"	Set relative position	36
<ESC> "="	Select printer	46
<ESC> "V"	Set/cancel 90°cw rotate character printing	26
<ESC> "a"	Align position	37
<BEL>	Control peripheral device	45
<VT>	Vertical tab	34

<Commands Set II>

<FF>	Form feed	33
<SI>	Inverted printing	25
<SO>	Expanded printing	23
<DC1>	Select printer	46
<DC2>	Cancel inverted printing	25
<DC3>	Deselect printer	46
<DC4>	Cancel expanded printing	23
<CAN>	Cancel last line	46
<FS>	Control peripheral device immediately	45
<ESC> <BEL>	Define drive pulse width for peripheral device	45
<ESC> <SO>	Double-height printing	23
<ESC> <DC4>	Cancel double-height printing	23
<ESC> "-"	Underlining	25
<ESC> "/"	Select zero style	21
<ESC> "0"	Set line spacing to 1/8 inch	35
<ESC> "4"	Select highlight printing	25
<ESC> "5"	Cancel highlight printing	25
<ESC> ":"	Select 16-dot pitch printing	22
<ESC> "B"	Set vertical tab position	35
<ESC> "C" <0>	Set page length in inches	31
<ESC> "C"	Set page length in lines	31
<ESC> "E"	Select emphasized printing	26
<ESC> "F"	Cancel emphasized printing	26
<ESC> "G"	Select double-strike printing	27
<ESC> "H"	Cancel double-strike printing	27
<ESC> "K"	Print normal density graphics	38
<ESC> "L"	Print triple density graphics	38
<ESC> "M"	Select 12-dot pitch printing	22
<ESC> "N"	Set bottom margin	31
<ESC> "O"	Cancel bottom margin	31
<ESC> "P"	Select 15-dot pitch printing	22
<ESC> "Q"	Set right margin	32
<ESC> "W"	Select character width	23
<ESC> "a"	Align positions	37
<ESC> "b"	Select bar code printing	30
<ESC> "h"	Select character height	24
<ESC> "l"	Set left margin	32
<ESC> "o"	Select 14-dot pitch printing	22
<ESC> "z" <1>	Set line spacing to 1/6 inch	34

10-2. Commands to Select Characters

FUNCTION: **Select international character set**

CODE : <ESC> "R" *n*

DEC : 27 82 *n*

HEX : 1B 52 *n*

REMARKS : * available in both Sets I+II.
Selects an international character according to the value of *n*, as shown below: ($0 \leq n \leq 10$)

n	Country
0	U.S.A
1	France
2	Germany
3	UK
4	Denmark I
5	Sweden
6	Italy
7	Spain
8	Japan
9	Norway
10	Denmark II

The default value is $n=0$.

FUNCTION: **Select character code table**

CODE : <ESC> "t" *n*

DEC : 27 116 *n*

HEX : 1B 74 *n*

REMARKS : * available in both Sets I+II.
Selects the page of character code table. $0 \leq n \leq 1$.
The default value is $n=0$.

FUNCTION: **Select zero style**

CODE : <ESC> "/" *n*

DEC : 27 47 *n*

HEX : 1B 2F *n*

REMARKS : * available only when printer set to Set II.
Causes subsequent zero characters to be printed with a slash when *n* is 1, and without a slash when *n* is 0.
The default value is $n=0$.

FUNCTION: **Select 12-dot pitch printing**
CODE : <ESC> "M"
DEC : 27 77
HEX : 1B 4D
REMARKS : * available only when printer set to Set II.
Prints 12-dot pitch characters without extra space.

FUNCTION: **Select 14-dot pitch printing**
CODE : <ESC> "o"
DEC : 27 111
HEX : 1B 6F
REMARKS : * available only when printer set to Set II.
Prints 12-dot pitch characters with 2-dot spacing between characters.

FUNCTION: **Select 15-dot pitch printing**
CODE : <ESC> "P"
DEC : 27 80
HEX : 1B 50
REMARKS : * available only when printer set to Set II.
Prints 12-dot pitch characters with 3-dot spacing between characters.

FUNCTION: **Select 16-dot pitch printing**
CODE : <ESC> ":"
DEC : 27 58
HEX : 1B 3A
REMARKS : * available only when printer set to Set II.
Prints 12-dot pitch characters with 4-dot spacing between characters.

FUNCTION: **Set character spacing**
CODE : <ESC> <SP> *n*
DEC : 27 32 *n*
HEX : 1B 20 *n*
REMARKS : * available in both Sets I+II.
Sets the space between characters by *n* dots. $0 \leq n \leq 32$.
The default value is $n=0$.

FUNCTION: **Expanded printing**
CODE : <SO>
DEC : 14
HEX : 0E
REMARKS : * available only when printer set to Set II.
Causes subsequent characters to be expanded.

FUNCTION: **Cancel expanded printing**
CODE : <DC4>
DEC : 20
HEX : 14
REMARKS : * available only when printer set to Set II.
Cancels expanded printing.

FUNCTION: **Select character width**
CODE : <ESC> "W" *n*
DEC : 27 87 *n*
HEX : 1B 57 *n*
REMARKS : * available only when printer set to Set II.
Selects a character width according to the value of *n*, as shown below: (The default value is *n*=0.)

n	Character width
0	Normal
1	Double

FUNCTION: **Double-height printing**
CODE : <ESC> <SO>
DEC : 27 14
HEX : 1B 0E
REMARKS : * available only when printer set to Set II.
Prints subsequent characters at double height without moving the base line.

FUNCTION: **Cancel double-height printing**
CODE : <ESC> <DC4>
DEC : 27 20
HEX : 1B 14
REMARKS : * available only when printer set to Set II.
Cancels double-height printing.

FUNCTION: **Select character height**

CODE : <ESC> "h" *n*

DEC : 27 104 *n*

HEX : 1B 68 *n*

REMARKS : * available only when printer set to Set II.
Selects a character height according to the value of *n*, as shown below:

n	Character height
0	Normal
1	Double

The default value is $n=0$.

FUNCTION: **Set print mode**

CODE : <ESC> "!" *n*

DEC : 27 33 *n*

HEX : 1B 21 *n*

REMARKS : * available in both Sets I+II.
Sets a print mode. $0 \leq n \leq 255$.
Each bit of *n* is used as follows:

Bit	Function	Value	
		0	1
0	Character font	Font A	Font B
1	Undefined		
2	Undefined		
3	Undefined		
4	Double-height	Canceled	Set
5	Double-width	Canceled	Set
6	Undefined		
7	Undefined		

NOTE:

The double-height mode and double-width can be set at the same time. The default value is $n=0$.

FUNCTION: **Underlining**
CODE : <ESC> "-" *n*
DEC : 27 45 *n*
HEX : 1B 2D *n*
REMARKS : * available only when printer set to Set II.
Causes subsequent characters to be underlined when *n* is 1,and stops underlining
when *n* is 0. Spaces skipped by horizontal tabulation are not underlined.

FUNCTION: **Select highlight printing**
CODE : <ESC> "4"
DEC : 27 52
HEX : 1B 34
REMARKS : * available only when printer set to Set II.
Causes subsequent characters to be highlighted.

FUNCTION: **Cancel highlight printing**
CODE : <ESC> "5"
DEC : 27 53
HEX : 1B 35
REMARKS : * available only when printer set to Set II.
Cancels highlight printing.

FUNCTION: **Inverted printing**
CODE : <SI>
DEC : 15
HEX : 0F
REMARKS : * available only when printer set to Set II.
Causes subsequent characters to be inverted.

FUNCTION: **Cancel inverted printing**
CODE : <DC2>
DEC : 18
HEX : 12
REMARKS : * available only when printer set to Set II.
Cancels inverted printing.

FUNCTION: **Set/cancel inverted character printing**

CODE :	<ESC>	"{"	*n*
DEC :	27	123	*n*
HEX :	1B	7B	*n*

REMARKS : * available in both Sets I+II.
Sets or cancels inverted character printing.
* Only the lowest bit of *n* is valid.
When *n*=<*******1>B, inverted character printing is set.
When *n*=<*******0>B, inverted character printing is canceled.

NOTE:
Valid only when input at the beginning of a line.

FUNCTION: **Set/cancel 90°cw (clockwise) rotated character printing**

CODE :	<ESC>	"V"	*n*
DEC :	27	86	*n*
HEX :	1B	56	*n*

REMARKS : * available in both Sets I+II.
Sets or cancels 90°cw rotated character printing.
* When *n*=1, sets 90°cw rotated character printing.
* When *n*=0, cancels 90°cw rotated character printing.

FUNCTION: **Select emphasized printing**

CODE :	<ESC>	"E"
DEC :	27	69
HEX :	1B	45

REMARKS : * available only when printer set to Set II.
Causes subsequent characters to be emphasized.

FUNCTION: **Cancel emphasized printing**

CODE :	<ESC>	"F"
DEC :	27	70
HEX :	1B	46

REMARKS : * available only when printer set to Set II.
Cancels emphasized printing.

FUNCTION: **Select double-strike printing**
CODE : <ESC> "G"
DEC : 27 71
HEX : 1B 47
REMARKS : * available only when printer set to Set II.
Causes subsequent characters to be double-strike.

FUNCTION: **Cancel double-strike printing**
CODE : <ESC> "H"
DEC : 27 72
HEX : 1B 48
REMARKS : * available only when printer set to Set II.
Cancels double-strike printing.

10-3. Commands to Print the Bar Code

FUNCTION: **Print bar code**

CODE :	<GS>	"k"	*n*	*[d]k*	<NUL>
DEC :	29	107	*n*	*[d]k*	0
HEX :	1D	6B	*n*	*[d]k*	00

REMARKS : * available in both Sets I+II.
Selects a bar code system and prints the bar code. $0 \le n \le 6$.
* Sets the print starting position to the beginning of the line.
* *n* selects the bar code system from the following table.

n	Bar code system
0	UPC-A
1	UPC-E
2	EAN-13
3	EAN-8
4	CODE39
5	ITF
6	CODABAR

* *d* indicates the characters to be printed and *k* indicates the number of characters to be printed.

NOTES:

1. When data is present in the print buffer, this command is ignored.
2. Performs the paper feeding required for printing the bar code, regardless of the current line spacing.
3. In each bar code system, if a character code "*d*" cannot be printed, the printer prints the processed data and the following data is treated as normal data.
4. When a bar code system with a fixed number of printing characters is selected, the number of characters "*k*" should agreed with that number.
5. If the horizontal size exceeds one line, the excess data is not printed.

FUNCTION: **Select horizontal size of bar code**

CODE :	<GS>	"w"	*n*
DEC :	29	119	*n*
HEX :	1D	77	*n*

REMARKS : * available in both Sets I+II.
Selects the horizontal size (magnification) of the bar code.
$2 \le n \le 4$.
The default value is $n=3$.

FUNCTION: **Select height of bar code**
CODE : <GS> "h" *n*
DEC : 29 104 *n*
HEX : 1D 68 *n*
REMARKS : * available in both Sets I+II.
Selects the height of the bar code.
* *n* specifies the number of dots in the vertical direction.
The default value is $n=162$.

FUNCTION: **Select printing position of HRI characters**
CODE : <GS> "H" *n*
DEC : 29 72 *n*
HEX : 1D 48 *n*
REMARKS : * available in both Sets I+II.
Selects the printing position of HRI characters when printing a bar code.
* *n* selects the printing position as the following table:

n	Printing position
0	Not printed
1	Above the bar code
2	Below the bar code
3	Both above and below the bar code

* HRI means Human Readable Interpretation.

NOTES:
1. HRI characters are printed using the font specified by <GS> "f" *n*.
2. The default value is $n=0$.

FUNCTION: **Select font for HRI characters**

CODE :	<GS>	"f"	*n*
DEC :	29	102	*n*
HEX :	1D	66	*n*

REMARKS: * available in both Sets I+II.
Selects a font for the HRI characters used when printing a bar code. $n=0,1$.
* *n* selects the font from the following table.

n	Font
0	Font A
1	Font B

* HRI means Human Readable Interpretation.

NOTES:

1. HRI characters are printed at the position specified by <GS> "H" *n*.
2. The default value is $n=0$.

FUNCTION: **Select bar code printing**

CODE :	<ESC>	"b"	*n1*	*n2*	*n3*	*n4*	*m1*	*m2*	...	RS
DEC :	27	98	*n1*	*n2*	*n3*	*n4*	*m1*	*m2*	...	30
HEX :	1B	62	*n1*	*n2*	*n3*	*n4*	*m1*	*m2*	...	1E

REMARKS: * available only when printer set to Set II.
Prints bar code according to the value of *n1*, as shown below:

n1	Bar code type
1	UPC
2	JAN-8, EAN-8
3	JAN-13, EAN-13
4	CODE39
5	ITF

n2 indicates whether the characters are printed or not, as shown below:

n2	Characters
1	Not printed
2	Print below the bar codes

n3 indicates whether the characters are printed or not, as shown below:

n3	UPC, JAN, EAN	CODE 39	ITF
1	2-dot module	2:6	2:5
2	3-dot module	3:9	4:10
3	4-dot module	4:12	6:15

n4 indicates the height of bar code with dot unit.
m1 m2 ... indicates the characters to be printed.

10-4. Commands to Set the Page Format

FUNCTION: **Set page length in lines**
CODE : <ESC> "C" *n*
DEC : 27 67 *n*
HEX : 1B 43 *n*
REMARKS : * available only when printer set to Set II.
Sets the page length in the current line spacing, where *n* is between 1 and 127.
Changing the line spacing later does not alter the physical page length.
The current line becomes the top of the page.

FUNCTION: **Set page length in inches**
CODE : <ESC> "C" 0 *n*
DEC : 27 67 0 *n*
HEX : 1B 43 00 *n*
REMARKS : * available only when printer set to Set II.
Sets the page length to *n* inches,where *n* is between 1 and 22.
The current line becomes the top of the page.

FUNCTION: **Set bottom margin**
CODE : <ESC> "N" *n*
DEC : 27 78 *n*
HEX : 1B 4E *n*
REMARKS : * available only when printer set to Set II.
Sets the bottom margin to *n* lines in the current line spacing, where *n* is between 0 and 127.
Bottom margin is reset when changing the page length.

FUNCTION: **Cancel bottom margin**
CODE : <ESC> "O"
DEC : 27 79
HEX : 1B 4F
REMARKS : * available only when printer set to Set II.
Cancels the bottom margin.

FUNCTION: **Set left margin**

CODE :	<ESC>	"l"	*n*
DEC :	27	108	*n*
HEX :	1B	6C	*n*

REMARKS : * available only when printer set to Set II.
Sets the left margin at column *n* (where *n* is between 0 and 255) in the current character pitch.
The default value is *n*=0.

FUNCTION: **Set right margin**

CODE :	<ESC>	"Q"	*n*
DEC :	27	81	*n*
HEX :	1B	51	*n*

REMARKS : * available only when printer set to Set II.
Sets the right margin at column *n* (where *n* is between 1 and 255) in the current character pitch.
The default value is *n*=44.

10-5. Commands to Move the Print Position

FUNCTION: **Print and line feed**
CODE : <LF>
DEC : 10
HEX : 0A
REMARKS : * available in both Sets I+II.
Prints the current line and feeds the paper to the next line.
Sets the print starting position to the beginning of the line.

FUNCTION: **Print and line feed**
CODE : <CR>
DEC : 13
HEX : 0D
REMARKS : * available in both Sets I+II.
Prints the current line and feeds the paper to the next line.
The command is ignored when the DIP SW-8 is set ON.

FUNCTION: **Form feed**
CODE : <FF>
DEC : 12
HEX : 0C
REMARKS : * available only when printer set to Set II.
Feeds the paper to the top of the next page according to the current page length, and moves the print positions to the left margin.

FUNCTION: **Horizontal tab**
CODE : <HT>
DEC : 9
HEX : 09
REMARKS : * available in both Sets I+II.
Moves the print position to the next horizontal tab position.

NOTES:

1. Ignored if there is no next horizontal tab position in the current line.
2. Horizontal tab positions are set by using ESC D.
3. The default horizontal tab positions are at intervals of 8 characters (9th column,17th,25th...)

FUNCTION: **Vertical tab**
CODE : <VT>
DEC : 11
HEX : 0B
REMARKS : * available only when printer set to Set II.
Feeds the paper to the next vertical tab position and moves the print position to the left margin. Performs a line feed if no vertical tabs are set.
Feeds to the top of the next page if vertical tabs are set but the current line is at or below the last vertical tab position.

FUNCTION: **Print and feed paper *n* dot lines**
CODE : <ESC> "J" *n*
DEC : 27 74 *n*
HEX : 1B 4A *n*
REMARKS : * available in both Sets I+II.
Prints the data in the print buffer and feeds the paper *n* dot lines. $0 \leq n \leq 255$.
* Sets the print starting position to the beginning of the line.

FUNCTION: **Print and feed paper *n* lines**
CODE : <ESC> "d" *n*
DEC : 27 100 *n*
HEX : 1B 64 *n*
REMARKS : * available only when printer set to Set I.
Prints the data in the print buffer and feeds the paper *n* lines. $0 \leq n \leq 255$.
* Sets the print starting position to the beginning of the line.
* Valid only when the DIP SW-11 is ON.
* Has a different function when the DIP SW-11 is OFF.

FUNCTION: **Set line spacing to 1/6 inch**
CODE : <ESC> "z" 1
DEC : 27 122 1
HEX : 1B 7A 01
REMARKS : * available only when printer set to Set II.
Sets the distance the paper advances in subsequent line feeds to 1/6 inch.

FUNCTION: **Set line spacing to 1/8 inch**

CODE :	<ESC>	"0"
DEC :	27	48
HEX :	1B	30

REMARKS : * available only when printer set to Set II.
Sets the distance the paper advances in subsequent line feeds to 1/8 inch.

FUNCTION: **Set line spacing to 1/6 inch**

CODE :	<ESC>	"2"
DEC :	27	50
HEX :	1B	32

REMARKS : * available in both Sets I+II.
Sets the line spacing to 1/6 of an inch.

FUNCTION: **Set line spacing to *n* dots**

CODE :	<ESC>	"3"	*n*
DEC :	27	51	*n*
HEX :	1B	33	*n*

REMARKS : * available in both Sets I+II.
Sets the line spacing to *n* dots. $0 \leq n \leq 255$.

FUNCTION: **Set vertical tab positions**

CODE :	<ESC>	"B"	*n1*	*n2*	...	<NUL>
DEC :	27	66	*n1*	*n2*	...	0
HEX :	1B	42	*n1*	*n2*	...	00

REMARKS : * available only when printer set to Set II.
Cancels all current vertical tab positions and sets new vertical tab positions at lines *n1*, *n2*, etc., where *n1*, *n2*, etc.,are numbers between 0 and 255.
A maximum of 16 vertical tab positions can be set. The tab positions must be specified in ascending order; any violation of ascending order terminates the tab position list. Standard termination is by the <0> control code. The vertical tab positions are set in terms of the current line spacing and do not move if the line spacing is changed later.

FUNCTION: **Set horizontal tab positions**

CODE	:	<ESC>	"D"	*[n]k* <NUL>
DEC	:	27	68	*[n]k* 0
HEX	:	1B	44	*[n]k* 00

REMARKS: * available in both Sets I+II.
Cancels all current horizontal tab positions and sets new tab positions columns *n1*, *n2*, etc. in the current character pitch, where *n1*, *n2*, etc. are numbers between 1 and 255.
A maximum of 16 horizontal tab positions can be set.
The tab positions must be specified in ascending order; any violation of ascending order terminates the tab position list.
Standard termination is by the <0> control code. $1 \leq n \leq 255$. $0 \leq k \leq 32$.
The default tab positions are at intervals of 8 characters (9th column, 17th, 25th...)

FUNCTION: **Set absolute position**

CODE	:	<ESC>	"$"	*n1*	*n2*
DEC	:	27	36	*n1*	*n2*
HEX	:	1B	24	*n1*	*n2*

REMARKS: * available in both Sets I+II.
Sets the print starting position to the specified number of dots from the beginning of the line. $0 \leq n1 \leq 255$. $0 \leq n2 \leq 1$.
The print starting position is the $n1+n2 \times 256$ dot position from the beginning of the line.

NOTE:
This command is ignored when the specifications exceed the end of the line.

FUNCTION: **Set relative position**

CODE	:	<ESC>	"\"	*n1*	*n2*
DEC	:	27	92	*n1*	*n2*
HEX	:	1B	5C	*n1*	*n2*

REMARKS: * available in both Sets I+II.
Moves the print starting position to the specified number of dots from the current position. $0 \leq n1 \leq 255$. $0 \leq n2 \leq 255$.
* The relative position is set by $n1+n2 \times 256$.
* This command is ignored when the specifications exceed the end of the line.

FUNCTION: **Align positions**

CODE	:	<ESC>	"a"	*n*
DEC	:	27	97	*n*
HEX	:	1B	61	*n*

REMARKS : * available in both Sets I+II.

Aligns all the characters in one line to the specified position.

$0 \leq n \leq 2$.

* *n* specifies the alignment as follows:

n	Position
0	Align left
1	Align center
2	Align right

NOTE:

Valid only when input at the beginning of a line.

10-6. Commands to Print Dot Graphics

FUNCTION: **Print normal density graphics**

CODE :	<ESC>	"K"	*n*	<0>	*m1*	*m2* ...
DEC :	27	75	*n*	00	*m1*	*m2* ...
HEX :	1B	4B	*n*	00	*m1*	*m2* ...

REMARKS : * available only when printer set to Set II.
Prints normal density dot graphics. The graphics image is 24 dots high and $n \times 2$ dots wide. *m1*,*m2*,... are the dot data, each a 1-byte value from 0 to 255 representing 24 vertical dots, with the most significant bit at the top three and the least significant bit at the bottom three. The number of data bytes must be *n*. Dots beyond the right margin are ignored.
$n = 1 \sim 255$.

FUNCTION: **Print triple density graphics**

CODE :	<ESC>	"L"	*n1*	*n2*	*m1*	*m2* ...
DEC :	27	76	*n1*	*n2*	*m1*	*m2* ...
HEX :	1B	4C	*n1*	*n2*	*m1*	*m2* ...

REMARKS : * available only when printer set to Set II.
Prints triple density dot graphics. The graphics image is 24 dots high and $n1 + n2 \times 256$ dots wide. *m1*, *m2*,... are the dot data, each a 1-byte value from 0 to 255 representing 24 vertical dots, with the most signification bit at the top three and the least signification bit at the bottom three.
The number of data bytes must be $n1 + n2 \times 256$. Dots beyond the right margin are ignored. The maximum value of $n1 + n2 \times 256$ is 528.

FUNCTION: **Set bit image mode and print**

CODE : <ESC> "*" *m* *n1* *n2* *[d]k*

DEC : 27 42 *m* *n1* *n2* *[d]k*

HEX : 1B 2A *m* *n1* *n2* *[d]k*

REMARKS : * available in both Sets I+II.

Sets the bit image mode using *m* and the number of dots using *n1* and *n2*.

$m = 0,1,32,33.\ 0 \le n1 \le 255.\ 0 \le n2 \le 3.\ 0 \le d \le 255.$

$k = n1 + n2 \times 256\ (m=0,1).$

$k = (n1 + n2 \times 256) \times 3\ (m=32,33).$

* The number of dots in the horizontal direction is $n1 + n2 \times 256$.
* If the bit image data input exceeds the number of dots to be printed on a line, the excess data is ignored.
* *d* indicates the bit image data. Set a corresponding bit to 1 to print a dot, otherwise set it to 0.
* The bit image modes selectable by *m* are as follows:

m	Mode	Vertical Direction		Horizontal Direction	
		Number of Dots	Dot Density	Dot Density	Maximum Number of Dots
0	8-dot single-density	8	68DPI	101DPI	264
1	8-dot double-density	8	68DPI	203DPI	528
32	24-dot single-density	24	203DPI	101DPI	264
33	24-dot double-density	24	203DPI	203DPI	528

NOTES:

1. If m is out of range, *n1* and the data following will be processed as normal data.
2. After printing a bit image, the printer returns to the normal data processing mode.

3. The relationship between the image data and the dots to be printed is as follows:

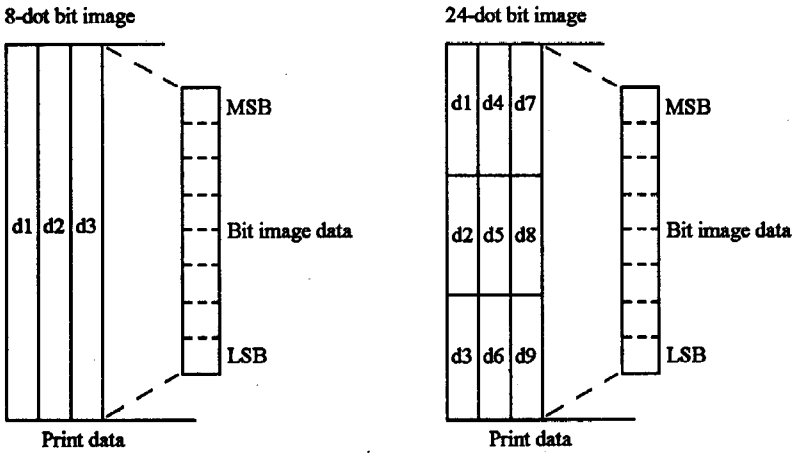

FUNCTION: **Define down-loaded bit image**

CODE :	<GS>	"*"	*n1*	*n2*	*[d]k*
DEC :	27	42	*n1*	*n2*	*[d]k*
HEX :	1D	2A	*n1*	*n2*	*[d]n1×n2×8*

REMARKS : * available in both Sets I+II.
Defines a down-loaded bit image with the number of dots specified by *n1* and *n2*. $1 \le n1 \le 66$, $1 \le n2 \le 255$, $n1 \times n2 < 1500$.
* The number of dots in the horizontal direction is *n1*×8, and in the vertical direction is *n2*×8.
* *d* specifies the bit image data.
* After a down-loaded bit image is defined once, it is available until another definition is made, until ESC @ is executed, or until the printer is turned off.

NOTE:
The relationship between the bit image data and the transmitted dots is as follows:

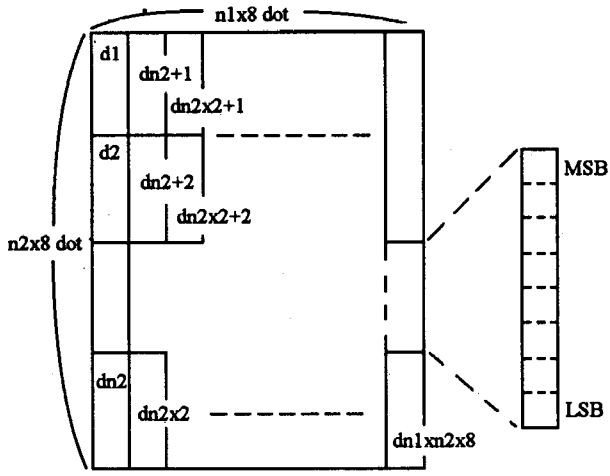

FUNCTION: **Print down-loaded bit image**

CODE : <GS> "/" *m*

DEC : 29 47 *m*

HEX : 1D 2F *m*

REMARKS: * available in both Sets I+II.

Prints a down-loaded bit image using the mode specified by *m*. $0 \leq m \leq 3$.

* Selects the print mode according to the value from the following table.

m	Mode	Vertical Direction Dot Density	Horizontal Direction Dot Density
0	Normal mode	203dpi	203dpi
1	Double-width mode	203dpi	101dpi
2	Double-height mode	101dpi	203dpi
3	Quadruple mode	101dpi	101dpi

10-7. Download Character Commands

FUNCTION: **Select/cancel user-defined character set**

CODE :	<ESC>	"%"	*n*
DEC :	27	37	*n*
HEX :	1B	25	*n*

REMARKS : * available in both Sets I+II.
Selects or cancels the user-defined character set. $0 \le n \le 255$.
* Only the lowest bit of *n* is valid.
When *n*=<*******1>B, the user-defined character set is selected.

FUNCTION: **Define user-defined characters**

CODE :	<ESC>	"&"	*n*	*m*	*[a[p]sxa]m-n+1*
DEC :	27	38	*n*	*m*	*[a[p]sxa]m-n+1*
HEX :	1B	26	*n*	*m*	*[a[p]sxa]m-n+1*

REMARKS : * available in both Sets I+II.
Defines user-defined characters for ANK character codes.
* *s* specifies the number of bytes in the vertical direction. *s*=3.
* *n* specifies the beginning ASCII code for the definition and *m* the final code. If only one character is defined, use $n=m.32 \le n \le m \le 126$.
* The allowable character code range is from ASCII code <20>H to <7E>H and the maximum number of characters is 53.
* *a* specifies the number of dots in the horizontal direction. $0 \le a \le 12$ (Font A), $0 \le a \le 9$ (Font B).
* *p* is the dot data for the characters. The dot pattern for a dots is in the horizontal direction from the left side. The remaining dot pattern on the right side is space. The amount of data to be defined is s ×a.0≤p1...ps ×a255.
* After user-defined characters are defined once, they are available until another definition is made, until ESC @ is executed, or until the printer is turned off.

NOTES:

1. Once can define the maximum number of characters is 53 for Font A, at the same time, define the same number of characters for Font B. (The total maximum number is 106.)
2. For every font, the different definition only can define 53 times.

Examples:

* Font A is selected:

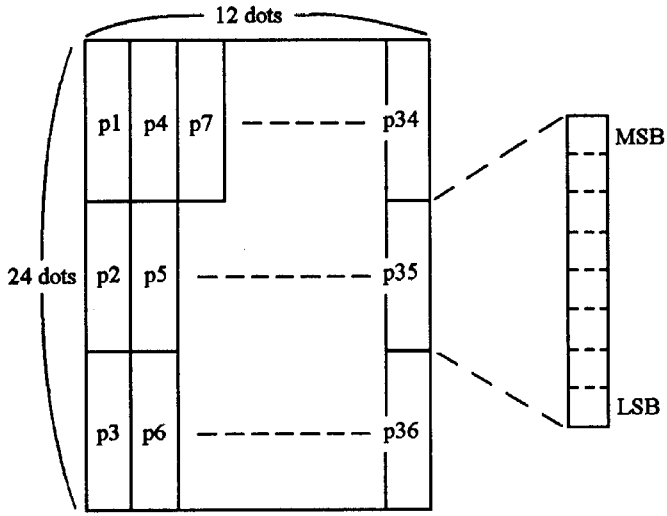

* Font B is selected:

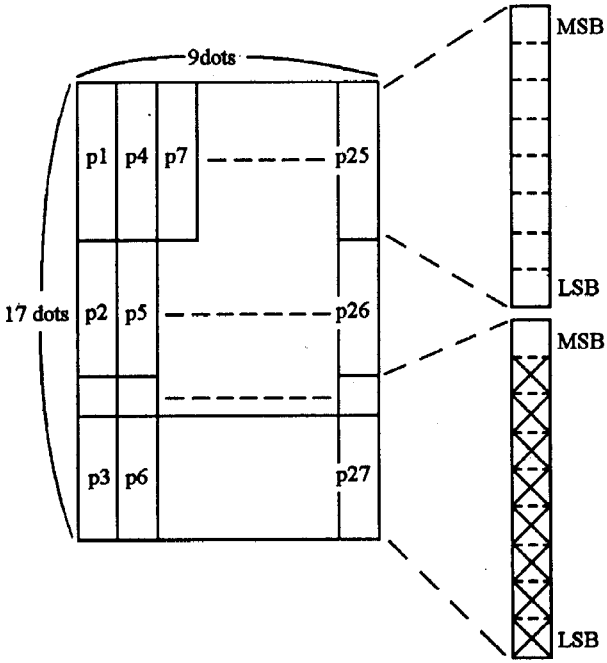

10-8. Commands to Control Peripheral

FUNCTION: **Define drive pulse width for peripheral device**

CODE :	<ESC>	<BEL>	*n1*	*n2*
DEC :	27	7	*n1*	*n2*
HEX :	1B	07	*n1*	*n2*

REMARKS : * available only when printer set to Set II.
Defines the drive pulse width for peripheral devices requiring other than standard 200ms pulse time and delay time. *n1* indicates the energizing time and *n2* indicates the delay time, using 10ms units.

FUNCTION: **Control peripheral device**

CODE :	<BEL>
DEC :	7
HEX :	07

REMARKS : * available only when printer set to Set II.
Executes drive pulse for peripheral device.

FUNCTION: **Control peripheral device immediately**

CODE :	<FS>
DEC :	28
HEX :	1C

REMARKS : * available only when printer set to Set II.
Executes drive pulse for peripheral device immediately.

FUNCTION: **Generate pulse**

CODE :	<ESC>	"p"	*m*	*n1*	*n2*
DEC :	27	112	*m*	*n1*	*n2*
HEX :	1B	70	*m*	*n1*	*n2*

REMARKS : * available in both Sets I+II.
The pulse defined by *n1* or *n2* is output on peripheral unit drive connector. $0<n1\leq n2\leq 255.m=0$.
* ON time is $n1\times 2ms$, and OFF time is $n2\times 2ms$.

NOTE:
If *m* is out of range, the printer reads *n1* and *n2* but does not output a pulse.

10-9. Miscellaneous Commands

FUNCTION: **Cancel last line**
CODE : <CAN>
DEC : 24
HEX : 18
REMARKS : * available only when printer set to Set II.
Deletes the last line currently present in the print buffer.

FUNCTION: **Deselect printer**
CODE : <DC3>
DEC : 19
HEX : 13
REMARKS : * available only when printer set to Set II.
Deselects the printer. The printer disregards all subsequent characters and commands except <DC1>, which returns to select the printer.

FUNCTION: **Select printer**
CODE : <DC1>
DEC : 17
HEX : 11
REMARKS : * available only when printer set to Set II.
Returns the printer selected,allowing it to receive and process all subsequent characters and commands.

FUNCTION: **Select device**

CODE :	<ESC>	"="	*n*
DEC :	27	61	*n*
HEX :	1B	3D	*n*

REMARKS : * available in both Sets I+II.
Selects a device to receive data from the host computer.
$0 \leq n \leq 255$.
* If the printer is not selected, all received data will be lost until the printer is selected by this command.
When n=<*******1>B, Selects the device.
When n=<*******0>B, does not select the device.

FUNCTION: **Enable/disable panel switches**

CODE : <ESC> "c" 5 *n*

DEC : 27 99 53 *n*

HEX : 1B 63 35 *n*

REMARKS : * available in both Sets I+II.
Enables or disables the paper feed switch. $0 \leq n \leq 255$.
* Only the lowest bit of *n* is valid.
When *n*= <*******0>B, the paper feed switch is enabled.
When *n*= <*******1>B, the paper feed switch is disabled.

NOTE:

If the panel switches are disabled by this command, the paper feed switch is disabled. Therefore, paper cannot be fed with the paper feed switch.

FUNCTION: **Enable/disable reversing paper after cutting**

CODE : <ESC> "c" 7 *n*

DEC : 27 99 55 *n*

HEX : 1B 63 37 *n*

REMARKS : * available in both Sets I+II.
Enable or disable reversing paper after cutting. $0 \leq n \leq 255$.
* Only the lowest bit of *n* is valid.
When *n*= <*******1>B, enable;
When *n*= <*******0>B, disable.

FUNCTION: **Initialize printer**

CODE : <ESC> "@"

DEC : 27 64

HEX : 1B 40

REMARKS : * available in both Sets I+II.
Reinitializes the printer. Clears the current line in the print buffer and returns settings to their power-up values.

NOTE:

Does not clear the receive buffer and the macro definition.

FUNCTION: **Set starting/ending of macro definition**

CODE :	<GS>	":"
DEC :	29	58
HEX :	1D	3A

REMARKS : * available in both Sets I+II.
Specifies the starting or ending of the macro definition. If this command is received while defining the macro, it ends the inition.

NOTES:

1. Up to 1024 bytes are available for macro definition. If the macro range exceeds 1024 bytes, the excess data is not defined.
2. Even if the ESC @ command (initialize the printer) is performed, the macro definition is not cleared. Therefore, it is possible to include ESC @ in the macro definition.
3. Normal printing operation is possible while defining the macro.

FUNCTION: **Execute Marco**

CODE :	<GS>	"^"	*n1*	*n2*	*n3*
DEC :	29	94	*n1*	*n2*	*n3*
HEX :	1D	5E	*n1*	*n2*	*n3*

REMARKS : * available in both Sets I+II.
Executes a macro.
n1: Specifies the number of times to execute the macro.
n2: Specifies the waiting time for executing the macro.
n2×100 sec waiting time is required for one execution.
n3: Specifies the macro executing mode.
* *n3*=0 Continuous macro execution.
Executes *n1* times continuously at the interval specified by *n2*
* *n3*=1 Executes the macro with the paper feed switch.
After waiting the period specified by *n2*, the error ONLINE blinks and the printer waits for the paper feed switch to be pressed.
After the paper feed switch is pressed, the printer executes the macro once.
The printer repeats this operation *n1* times.

NOTES:

1. If this command is received while defining the macro, the macro definition is aborted, and the definition is cleared.
2. If the macro is not defined or if *n1* is 0, nothing is executed.
3. Paper cannot be fed with the paper feed switch while executing the macro when *n3* is 1.

FUNCTION: **Full cut**

CODE	:	<ESC>	"i"
DEC	:	27	105
HEX	:	1B	69

REMARKS : * available in both Sets I+II.
Executes a full cut of the paper.

NOTES:

1. Valid only when input at the beginning of a line.
2. Valid only for the auto-cutter type.

FUNCTION: **Partial cut**

CODE	:	<ESC>	"m"
DEC	:	27	109
HEX	:	1B	6D

REMARKS : * available in both Sets I+II.
Executes a partial cut of the paper.

NOTES:

1. Valid only when input at the beginning of a line.
2. Valid only for the auto-cutter type.

FUNCTION: **Cut Paper**

CODE	:	<ESC>	"d"	n
DEC	:	27	100	n
HEX	:	1B	64	n

REMARKS : * available only when printer set to Set II. $0 \leq n \leq 1$.
When $n=0$ or "0", executes a full cut of the paper.
When $n=1$ or "1", executes a partial cut of the paper.
* Valid only when the DIP SW-11 is OFF.
* Has a different function when the DIP SW-11 is ON.

11. GENERAL SPECIFICATIONS

11-1 Printing specifications

Printing system..... Direct Thermal Dot-matrix
Print speed..... Approx.50mm/second
Print resolution..... 8 dots/mm
Print width..... 66mm
Font styles
  Characters..... ASCII, International
  Bar codes..... UPC, JAN, EAN, CODE39, ITF, CODABAR
Character matrix
  Font A.....12 dots × 24 dots
  Font B.....9 dots × 17 dots (selectable)
Paper specifications
  Recommended brand.....TF50KS-E(Jujo Paper Co.,Ltd.)
  Width.....76 ± 0.5mm
  Thickness..... 60 to 100μm
  Roll diameter.....85mm (Max.)
  Roll paper core
    Inside..... 11mm
    Outside..... 14mm
    (Paper should not be pasted to the paper core)
Interface
  Serial interface.....RS-232C (D-Sub 9pin connector)
                DSR or XON/XOFF handshaking
                9600, 4800, 2400, 1200 baud rate.
  Parallel interface.....Centronics compatible 57series 36pin connector
                /ACK or BUSY handshaking
Peripheral unit drive circuit...1 circuit (24V, Max.1A)
Environment
  Operation.....0°C to 50°C, 25% to 85%
  Storage.....-20°C to 60°C, 10% to 90%
Dimensions and Weight
  Height.....193mm
  Width.....158mm
  Depth.....234mm
  Weight.....Approx.2.0kg
Power supply.....100VAC ~ 240VAC, 50/60Hz

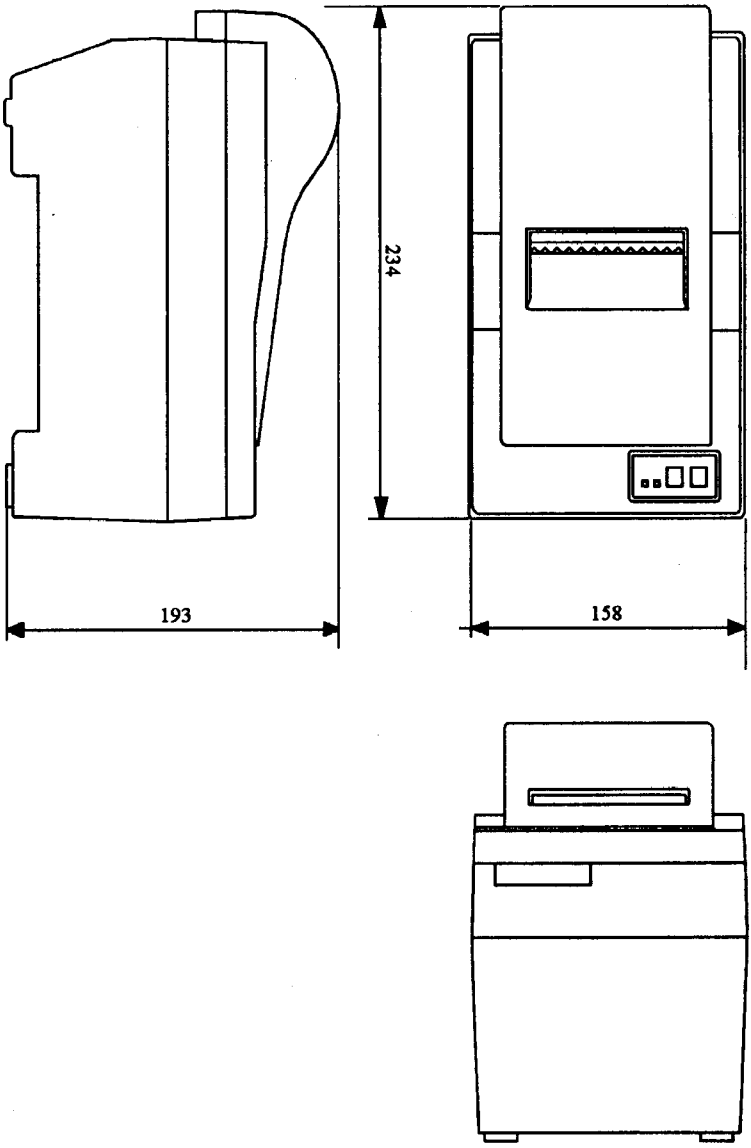

Fig.11-1 Overall dimensions (mm)

12. CHARACTER CODE TABLES

• **Page 0 (International character set: U.S.A)**

	HEX	0	1	2	3	4	5	6	7	8	9	A	B	C	D	E	F
HEX	BIN	0000	0001	0010	0011	0100	0101	0110	0111	1000	1001	1010	1011	1100	1101	1110	1111
0	0000	NUL 0	16	SP 32	0 48	@ 64	P 80	96	p 112	Ç 128	É 144	á 160	▒ 176	└ 192	╨ 208	α 224	≡ 240
1	0001	1	XON 17	! 33	1 49	A 65	Q 81	a 97	q 113	ü 129	æ 145	í 161	▓ 177	┴ 193	╤ 209	β 225	± 241
2	0010	2	18	" 34	2 50	B 66	R 82	b 98	r 114	é 130	Æ 146	ó 162	╗ 178	┬ 194	╥ 210	Γ 226	≥ 242
3	0011	3	XOFF 19	# 35	3 51	C 67	S 83	c 99	s 115	â 131	ô 147	ú 163	╝ 179	├ 195	╙ 211	π 227	≤ 243
4	0100	4	20	$ 36	4 52	D 68	T 84	d 100	t 116	ä 132	ö 148	ñ 164	╜ 180	─ 196	╘ 212	Σ 228	⌠ 244
5	0101	5	21	% 37	5 53	E 69	U 85	e 101	u 117	à 133	ò 149	Ñ 165	╛ 181	┼ 197	╒ 213	σ 229	⌡ 245
6	0110	6	22	& 38	6 54	F 70	V 86	f 102	v 118	å 134	û 150	ª 166	╞ 182	╞ 198	╓ 214	µ 230	÷ 246
7	0111	7	23	' 39	7 55	G 71	W 87	g 103	w 119	ç 135	ù 151	º 167	╕ 183	╟ 199	╫ 215	τ 231	≈ 247
8	1000	8	24	(40	8 56	H 72	X 88	h 104	x 120	ê 136	ÿ 152	¿ 168	╖ 184	╚ 200	╪ 216	Φ 232	° 248
9	1001	HT 9	25	) 41	9 57	I 73	Y 89	i 105	y 121	ë 137	Ö 153	⌐ 169	╢ 185	╔ 201	┘ 217	Θ 233	• 249
A	1010	LF 10	26	* 42	: 58	J 74	Z 90	j 106	z 122	è 138	Ü 154	¬ 170	║ 186	╩ 202	┌ 218	Ω 234	· 250
B	1011	11	ESC 27	+ 43	; 59	K 75	[91	k 107	{ 123	ï 139	¢ 155	½ 171	╗ 187	╦ 203	█ 219	δ 235	√ 251
C	1100	12	28	, 44	< 60	L 76	\ 92	l 108	| 124	î 140	£ 156	¼ 172	╝ 188	╠ 204	▄ 220	∞ 236	n 252
D	1101	CR 13	GS 29	− 45	= 61	M 77	] 93	m 109	} 125	ì 141	¥ 157	¡ 173	╜ 189	═ 205	▌ 221	∅ 237	² 253
E	1110	14	30	. 46	> 62	N 78	^ 94	n 110	~ 126	Ä 142	₧ 158	« 174	╛ 190	╬ 206	▐ 222	∈ 238	■ 254
F	1111	15	31	/ 47	? 63	O 79	_ 95	o 111	SP 127	Å 143	ƒ 159	» 175	┐ 191	╧ 207	▀ 223	∩ 239	SP 255

• Page 1 (International character set: U.S.A)

	HEX	0	1	2	3	4	5	6	7	8	9	A	B	C	D	E	F
HEX	BIN	0000	0001	0010	0011	0100	0101	0110	0111	1000	1001	1010	1011	1100	1101	1110	1111
0	0000	NUL 0	16	SP 32	0 48	@ 64	P 80	96	p 112	— 128	┴ 144	SP 160	ー 176	タ 192	ミ 208	═ 224	× 240
1	0001	1	XON 17	! 33	1 49	A 65	Q 81	a 97	q 113	━ 129	┬ 145	・ 161	ア 177	チ 193	ム 209	╞ 225	円 241
2	0010	2	18	" 34	2 50	B 66	R 82	b 98	r 114	━ 130	┤ 146	「 162	イ 178	ツ 194	メ 210	╪ 226	年 242
3	0011	3	XOFF 19	# 35	3 51	C 67	S 83	c 99	s 115	━ 131	├ 147	」 163	ウ 179	テ 195	モ 211	╡ 227	月 243
4	0100	4	20	$ 36	4 52	D 68	T 84	d 100	t 116	━ 132	┼ 148	、 164	エ 180	ト 196	ヤ 212	◢ 228	日 244
5	0101	5	21	% 37	5 53	E 69	U 85	e 101	u 117	━ 133	─ 149	・ 165	オ 181	ナ 197	ユ 213	◣ 229	時 245
6	0110	6	22	& 38	6 54	F 70	V 86	f 102	v 118	━ 134	│ 150	ヲ 166	カ 182	ニ 198	ヨ 214	◥ 230	分 246
7	0111	7	23	' 39	7 55	G 71	W 87	g 103	w 119	━ 135	│ 151	ァ 167	キ 183	ヌ 199	ラ 215	◤ 231	秒 247
8	1000	8	24	(40	8 56	H 72	X 88	h 104	x 120	│ 136	┌ 152	ィ 168	ク 184	ネ 200	リ 216	♠ 232	〒 248
9	1001	HT 9	25	) 41	9 57	I 73	Y 89	i 105	y 121	│ 137	┐ 153	ゥ 169	ケ 185	ノ 201	ル 217	♥ 233	市 249
A	1010	LF 10	26	* 42	: 58	J 74	Z 90	j 106	z 122	│ 138	└ 154	ェ 170	コ 186	ハ 202	レ 218	◆ 234	区 250
B	1011	11	ESC 27	+ 43	; 59	K 75	[91	k 107	{ 123	│ 139	┘ 155	ォ 171	サ 187	ヒ 203	ロ 219	♣ 235	町 251
C	1100	12	28	, 44	< 60	L 76	\ 92	l 108	| 124	│ 140	┌ 156	ャ 172	シ 188	フ 204	ワ 220	● 236	村 252
D	1101	CR 13	GS 29	- 45	= 61	M 77	] 93	m 109	} 125	│ 141	┐ 157	ュ 173	ス 189	ヘ 205	ン 221	○ 237	人 253
E	1110	14	30	. 46	> 62	N 78	^ 94	n 110	~ 126	│ 142	└ 158	ョ 174	セ 190	ホ 206	゛ 222	／ 238	■ 254
F	1111	15	31	/ 47	? 63	O 79	_ 95	o 111	SP 127	┼ 143	┘ 159	ッ 175	ソ 191	マ 207	゜ 223	＼ 239	SP 255

13. INTERNATIONAL CHARACTER SET

When an international character set is selected by a command from software, the following changes are made:

	Country	ASCII codes (hexadecimal)											
		23	24	40	5B	5C	5D	5E	60	7B	7C	7D	7E
0	U.S.A	#	$	@	[	\	]	^	~	{	|	}	~
1	France	#	$	à	°	Ç	§	^	~	é	ù	è	¨
2	Germany	#	$	§	Ä	Ö	Ü	^	~	ä	ö	ü	ß
3	U.K.	£	$	@	[	\	]	^	~	{	|	}	~
4	Denmark I	#	$	@	Æ	Ø	Å	^	~	æ	ø	å	~
5	Sweden	#	¤	É	Ä	Ö	Å	Ü	é	ä	ö	å	ü
6	Italy	#	$	@	°	\	é	^	ù	à	ò	è	ì
7	Spain	Pt	$	@	¡	Ñ	¿	^	~	¨	ñ	}	~
8	Japan	#	$	@	[	¥	]	^	~	{	|	}	~
9	Norway	#	¤	É	Æ	Ø	Å	Ü	é	æ	ø	å	ü
10	Denmark II	#	$	É	Æ	Ø	Å	Ü	é	æ	ø	å	ü

TSP200U9511